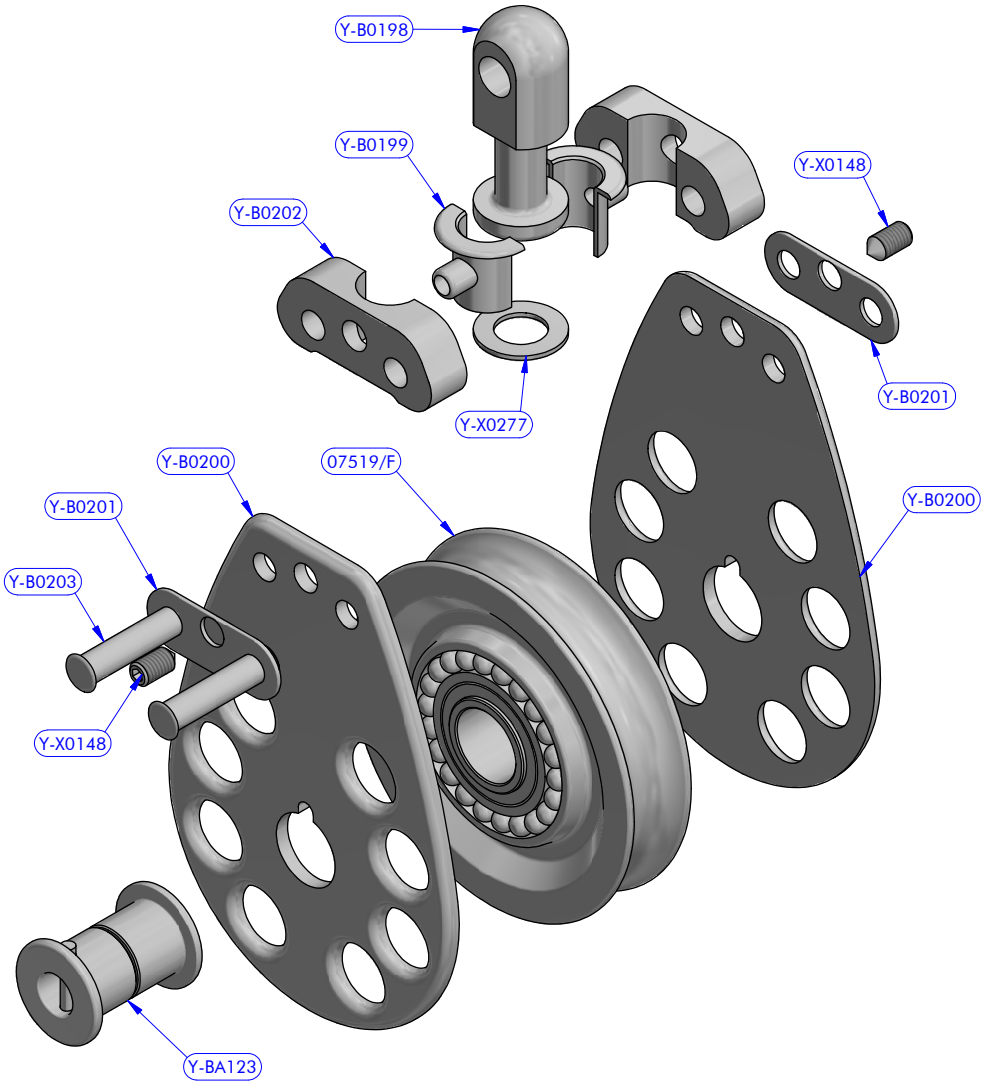

PART LIST			
CODE	DESCRIPTION	MATERIAL	Q.TY
07519/F	Sheave	Mekton	1
Y-B0198	Swivel head	S.Steel	1
Y-B0199	Swivel head bushing	Mekton	2
Y-B0200	Cheekplate	S.Steel	2
Y-B0201	Plate	S.Steel	2
Y-B0202	Spacer	S.Steel	2
Y-B0203	Rivet	S.Steel	2
Y-BA123	Caps kit	Various	1
Y-X0148	Set screw	S.Steel	2
Y-X0277	Washer	Tufnol	1

antal	S. Steel Series FAMILY	Single Block Ø75 ARTICLE	S0701 MODEL CODE	19/01/2020 DATE	00 REV.
	Exploded view DESCRIPTION			17092004 DWG N.	/ PG.